GAS TURBINE EFFICIENCY IMPROVEMENT BY INLET AIR-COOLING IN SUSTAINABLE ENERGY SYSTEM

Omid Zainali[1*] and Saeed Karimi Alavijeh[2]
National Iranian Gas Company (NIGC), Assaluyeh, Bushehr, Iran[1*]
National Iranian Gas Company (NIGC), Assaluyeh, Bushehr, Iran[2*]

*Corresponding author: O.Zainali@gmail.com

ABSTRACT

Nowadays Gas Turbine has widely used in various industries, such as electricity, gas, aviation and military industries so this vast application turned it to one of the most important engineering issues. So, the relevant companies try to explore the results of these power generation systems as possible in order to improve the efficiency and reduce fuel consumption and also they consider the reduction of environmental pollution. About %35 of country's annual power generation is produced by the gas units. However, by simple and extensive instruction in the industry, the cycle of power generation is along with relatively low efficiency (generally less than %35), thus they need high fuel consumption.

During the warm months, a gas turbine inlet air cooling technique is a useful option for increasing output. Inlet air cooling increases the power output by taking advantage of the gas turbine's feature of higher mass flow rate, due the compressor inlet temperature decays.
In the current study, the effect of compressor intake air cooling with absorption chiller is theoretically studied for a typically gas turbine. Initially the gas turbine cycle simulated in software then the compressor inlet air cooling method in order to increase the efficiency studied. By the thermodynamically analysis of the cycle and using EES software simulation, the effect of this method on increasing the efficiency of cycle showed.

The results obtained with this method are compared with the values of the condition without cooling system. Results shows after using the cooled inlet air, total power of the gas turbine increases by 518kw also the efficiency of gas turbine cycle increase by 7% and it makes this cycle more efficient and cost-effective.

Keywords: Gas Turbine Cycle, Sustainable Energy System, Energy Optimization, Thermodynamic Efficiency, Energy Saving.

1. INTRODUCTION

Today, by considering the problems of the world about the supply of fuel, the high cost of energy transfer and also the movement of reduction of underground fuel reserves, any slight increase in the power generation's efficiency will cause a significant reduction in fuel assumption and cost saving in generation. The basic operation of the gas turbine is similar to that of the steam power plant except that air is used instead of water. Fresh atmospheric air flows through a compressor that brings it to higher pressure. Energy is then added by spraying fuel into the air and igniting it so the combustion generates a high-temperature flow. This high-temperature high-pressure gas enters a turbine, where it expands down to the exhaust pressure, producing a shaft work output in the process. The turbine shaft work is used to drive the compressor and other devices such as an electric generator that may be coupled to the shaft. The energy that is not used for shaft work comes out in the exhaust gases, so these have either a high temperature or a high velocity. The purpose of the gas turbine determines the design so that the most desirable energy form is maximized. Gas turbines are used to power aircraft, trains, ships, electrical generators, or even tanks.

The gas turbine is composed of a compressor that supplies high pressure air for the combustor chamber, which provides high temperature flue gas at high pressure. Gas turbines are of constant-volume and their power output is directly proportional and limited by the air mass flow rate. As the compressor has a fixed capacity for a given rotational speed and volumetric flow rate of air, their volumetric capacity remains constant. Therefore, the mass flow rate of air enter into the gas turbine varies with their specific mass, which means that it depends on the temperature and the relative humidity of the ambient air (American Society of Heating, 2008).

Also exit of hot combustion gasses (exhaust gas) is one of the problems in operation of gas turbine which it produces the gasses in the combustion

chamber, after passing the power stage; because it would be discharged to the environment by high temperature (about 400oc). During this operation regional climate and weather condition would be affected by irreversible results. In addition, the high temperature of these gasses let to the energy exhaust of generation cycle as the sensible heat and also energy loss.

Nowadays, one of the main methods used to increase the gas turbine efficiency is the cooling of the compressor intake air. There are two main commercially options for this method: evaporative cooling and mechanical or absorption chillers. Santos et al. (2012) studied the effect of different compressor intake air cooling systems both evaporative media cooling and chiller systems for a single shaft gas turbine.

Gas turbine performance is critically limited by the amounting ambient temperature, mainly in hot and dry regions. It occurs because the power output is inversely proportional to the ambient temperature.

As gas turbine has been widely used for power generation and the demand for electricity is highest during periods of elevated ambient temperatures. This factor leads to an increase in power plant peaking capacity. For example, In the Saudi Electric Company's (SEC), approximately 42% of the annual energy is generated by gas turbines, and during the summer these turbines suffer a 24% decrease in their capacity, due to ambient temperature up to 50oC (Al-Ibrahim and Varnham, 2010).

Al-Ibrahim and Varnham (2010) reported that refrigerative cooling can uses mechanical or electrical vapor compression refrigeration equipment.

Jaber et al. (2006) studied the effect of air cooling intake on the gas turbine performance by comparing two different cooling systems, evaporative and cooling coil. Their results showed that the evaporative cooling and chiller system present similar improvement in the power output, about 1.0-1.5 MW, but the cooling coil of the mechanical chiller consumes more energy to run the vapor-compression refrigeration unit and the overall plant performance decrease.

Alhazmy and Najjar (2004) compared two different techniques of air coolers, water spraying system and cooling coils, and the results were analyzed for a specific set of operational and design conditions.

Nasser and El-Kalay (1991) suggested the use of a simple Li Br/water absorption system to cool the inlet air of gas turbine in Bahrain. One of the most effective and useful methods to increasing the gas turbine's output is air intake cooling techniques, this method especially for hot region is completely effective and efficient (Al-Ibrahim and Varnham, 2010).

Ana Paula Santos et al. (2012) showed the effect of cooling intake temperature on gas turbine power output. This study showed the gas turbine power output increase due to decreasing the air intake temperature.

In this paper a cooling system with absorption chiller for gas turbine was studied. The effect of cooling the intake air is studied. Gas turbine in case-base (without compressor intake air cooling system) and new model with intake air cooling system was simulated and analyzed. The results obtained in this model are compared with the value of both two conditions.

2. GAS TURBINE CYCLE

Figure 1, illustrates the schematic of simple gas turbine cycle. This model employed to simulate the air thermodynamic procedure from 1 to 4. Pressure and temperature calculations for each point are also determined, as shown in Figure1.

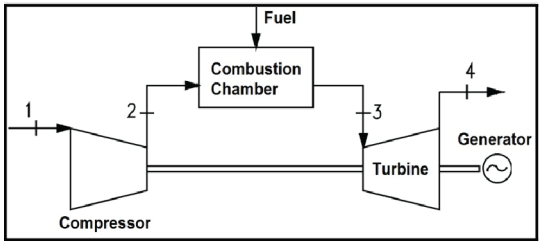

Figure 1 : Simple Gas turbine Cycle

2.1 Compressor

The compressor inlet temperature in typical gas turbine is equal to ambient temperature. Air has been considered as ideal gas in all gas turbine cycle, also using the polytrophic relation for ideal gas:

$$\frac{T_2}{T_1} = (r_p)^{(\frac{k-1}{k})} \tag{1}$$

Where rp is compression ratio in compressor, k is specific heat ratio:

$$k = \frac{C_p}{C_v} \tag{2}$$

Where Cp and Cv are specific heat at constant pressure and volume, respectively. Also pressure ratio:

$$r_p = \frac{P_2}{P_1} \tag{3}$$

Using equation for efficiency in compressor, the output temperature (T2) can be calculated as:

$$T_2 = \frac{T_1}{\eta_c}[(\frac{P_2}{P_1})^{\frac{k-1}{k}} - 1] + T_1 \tag{4}$$

Considering the first law of thermodynamic the compressor work estimated as follows:

$$\dot{W} = \dot{m}_a C_{pc,av}(T_2 - T_1) \tag{5}$$

Where $\dot{m}_a$ is the air mass flow rate and $C_{pc,av}$ is the specific heat of air at the constant pressure in average temperature across the compressor (Alhamzy and Najjar, 2004).

2.2 Combustion Chamber

The heat delivered by combustor is determined from energy balance:

$$\dot{Q} = \dot{m}_a C_{pcc,av}(T_2 - T_1) \tag{6}$$

Where $C_{pcc,av}$ is the flue gas specific heat at the combustion as function of the average value (Alhamzy and Najjar, 2004). Also fuel gas consumption in combustor chamber is defined as:

$$\dot{m}_f = \frac{\dot{Q}_{in}}{LHV \times \eta_{cc}} \tag{7}$$

Where η_{cc} is the combustor chamber efficiency and LHV is fuel gas lower heat value.

2.3 Turbine

The discharge temperature of the exhausted gas that living the turbine is defined as:

$$T_4 = T_3 - \eta_t T_4[1 - (\frac{1}{P_4/P_3})^{\frac{k-1}{k}}] \tag{8}$$

Where η_t is the turbine isentropic efficiency and P_4 is the turbine exhaust gas pressure in the last step of typically gas turbine cycle. Therefore total power produced from the turbine is equal to:

$$\dot{W}_t = \dot{m}_T C_{t,av}(T_3 - T_4) \tag{9}$$

Where $\dot{m}_T$ is the total mass flow rate composed of fuel ($\dot{m}_f$) and air mass flow rate (m_a).

Also $C_{t,av}$ is the fuel gas specific heat in average temperature through the turbine (Alhamzy and Najjar, 2004).

The net power obtained from the gas turbine cycle can be calculate by using Eq.(5) and Eq.(5):

$$\dot{W}_n = \dot{W}_t - \dot{W}_c \tag{10}$$

Lastly the thermal efficiency of gas turbine can be calculated as follow:

$$\eta_{th} = \frac{W_n}{\dot{Q}_{in}} \tag{11}$$

All equation was written for ideal Bryton gas turbine cycle. Equations for actual gas were written in the calculations and for simulation of this study.

3. ABSORPTION CHILLER SYSTEM

As mentioned before there are two basic methods to cool air inlet of compressor. First and most effective system is evaporative cooling (Paula

Santos et al, 2012). Evaporative coolers make use of evaporation of water to reduce the gas turbine inlet air temperature. But condensing the humid air at the compressor stage is one of the disadvantages of this method. Corrosion occurs on the compressor blades because of condensed water. Therefore using this method is not appropriate in many vital industries.

The second system uses mechanical or absorption chillers to cool air intake compressor. In this method water cool in chiller then flows through a heat exchanger located in the inlet duct to remove heat from the inlet air.

Figure 2, shows the simple absorption chiller cycle. In current study temperature and pressure has been calculated and simulated for all states (from 1 to 10).

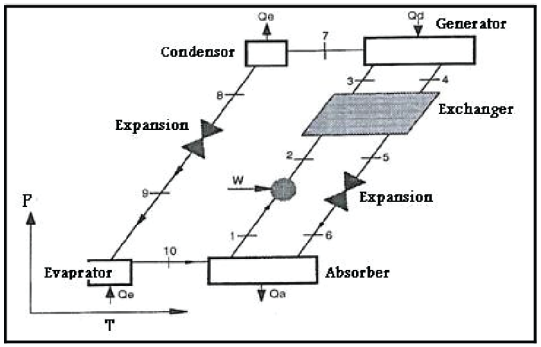

Figure 2 : Simple Absorption Chiller System

3.1 Mass balance in Evaporator:

$$\dot{m}_9 = \dot{m}_{10} + \dot{m} \tag{12}$$

Absorbed heat from evaporator can be calculated by Energy balance in Evaporator:

$$\dot{Q}_e = \dot{m}_{10}\,\dot{h}_{10} + \dot{m}_{11}\,\dot{h}_{11} - \dot{m}_9\,h_9 \tag{13}$$

3.2 Mass balance in Absorber:

$$\dot{m}_{10} + \dot{m}_{11} + \dot{m}_6 = \dot{m}_1 \tag{14}$$

Rejected heat from absorber can be calculated by Energy balance in absorber:

$$\dot{Q}_a = \dot{m}_{10}\,h_{10} + \dot{m}_{11}\,h_{11} + \dot{m}_6\,h_6 - \dot{m}_1\,h_1 \tag{15}$$

Energy balance in heat exchanger:

$$\dot{m}_2\,h_2 + \dot{m}_4\,h_4 = \dot{m}_3\,h_3 + \dot{m}_5\,h_5 \tag{16}$$

Energy consumption in pump:

$$\dot{W} = \dot{m}_1\,v_1(p_2 - p_1) \tag{17}$$

Where p2 and p1 are the pressure of liquid after and before of solution pump respectively. Also h is enthalpy of streams. Also In equation (16), assumes that specific volume of solution is constant.

Heat input in generator can be calculated by energy balance:

$$\dot{Q}_{gen} = \dot{m}_4\,h_4 + \dot{m}_7\,h_7 - \dot{m}_3\,h_3 \tag{18}$$

And heat rejected in condenser:

$$\dot{Q}_{cond} = \dot{m}_7(h_7 - h_8) \tag{19}$$

Finlay coefficient factor of absorption chiller can be estimated using the equation bellow:

$$COP_{Chiller} = \frac{\dot{Q}_e}{\dot{Q}_{gen}} \tag{20}$$

Where $\dot{Q}_e$ and $\dot{Q}_{gen}$ are energy exchanged in Evaporator and Generator respectively.

4. PERFORMANCE ENHANCEMENT

As mentioned before there are different methods for enhancement of gas turbine performance, preheating the air before combustion chamber by installing heat exchanger (recuperator), injecting steam or water to combustion chamber due to increasing mass flow, cooling the air between to stage of compressor by

installing after cooler are various ways to rectifying the efficiency of gas turbine cycle.

The purpose of this project is to enhancement of gas turbine cycle, for this purpose an absorption chiller has used to cool the inlet air. Also this chiller uses its energy from hot outlet exhaust gas. Absorption chillers can use steam water as inlet energy, also steam produces by using a heat exchanger and using hot exhaust gas.

Figure 3, illustrates the studied gas turbine cycle. This gas turbine was installed in Assaluyeh port in Iran. As shown in Figure 3, there are two steps compressor include low pressure compressor (Comp1) and high pressure compressor (Comp2), and an intercooler between them. Intercooler reduces temperature of exit gas from first compressor step. It helps to reduce second compressor's work, therefore it increases the efficiency of gas turbine cycle. Also this typical gas turbine has two steps turbine, high pressure turbine (Turb1) and low pressure turbine (Turb2), and one combustion chamber before each of them. It helps to increase the temperature of exhaust gas in turbine also increases the turbine's power output. Increasing the turbine's power output causes to enhancement the efficiency of the gas turbine cycle. There is a heat exchanger between hot gas outlet exhaust gas (stream 9) and compressed inlet air to first step of combustion chamber (stream 4). It helps to reduce the fuel consumption by increasing the temperature of combustion air inlet. Reducing the fuel consumption also increases the gas turbine cycle efficiency. This heat exchanger herein named Heat Recovery Steam Generation (HRSG). It makes steam without consumption fuel.

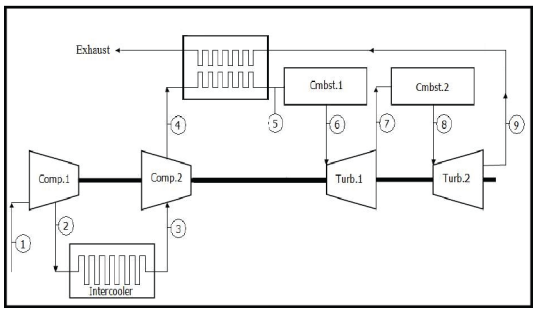

Figure 3: Schematic of Gas Turbine cycle (Case Study)

Climate properties in Assaluyeh Port are presented in Table 1. Some properties of weather like average of temperature, both wet and dry bulb temperature, dew point and altitude of gas turbine installed area is mentioned. Also humidity and moisture of air should be considered in calculation and simulation.

Table 1: Weather Properties of Assaluyeh Port (On Site Condition)

Dry Bulb (^{o}c)	37
Wet Bulb (^{o}c)	32
Altitude (m)	15
Relative Humidity (%)	70-87
Humidity Ratio (kg/kg$_{Dry\ Air}$)	0.092
Dew Point (^{o}c)	31
Specific Volume (m^{3}/kg)	2165

Characteristic data of gas studied turbine is presented in table 2. Air flow rate, temperature and pressure of gas stream are presented in table 2.

Table 2: Data for Studied Gas Turbine

Air flow (m^{3}/s)	10
LHV of Methane (kJ/kg)	50010
First Combustor outlet temperature (^{0}c)	1200
Second Combustor outlet temperature (^{0}c)	1100
Temperature of the intercooler fluid (^{0}c)	22
Regenerator effectiveness (%)	70
Intercooler effectiveness (%)	70
First Compressor effectiveness (%)	85
Second Compressor effectiveness (%)	85
First Turbine effectiveness (%)	83
Second Turbine effectiveness (%)	83
First Combustor effectiveness (%)	87
Second Combustor effectiveness (%)	87

5. SIMULATION IN EES SOFTWARE AND RESULTS

By means of calculate the equations and simulation of studied gas turbine as well as cooling system, simulation and coding was performed in EES software (Engineering Equation Solver). Also the gas turbine cycle with air intake cooling system has simulated in EES software. EES helps to simulate and analyze the complicated engineering equation. Figure 5 shows simulation window in EES software.

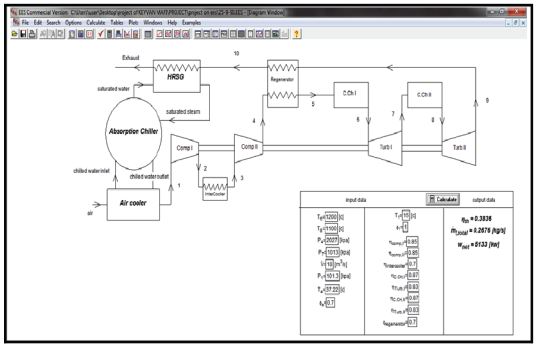

Figure 5: Gas Turbine Simulation's window in EES software

Simulation in this software helps us to change the all parameters and see the results. Also we are able to draw many graphs and tracing the parameters in comparison with others.

Simulation shows that after cooling the inlet air net power of gas turbine increase by 518kW and total thermal efficiency of cycle increase by 1.5% that is very effective and appreciable.

Calculation shows that air temperature decrease to 15oC by chiller absorption and heat exchanger (Air cooler system) and lead to decreasing compressor work (about 12%) and also increase total thermal efficiency (about 1.5%). Figure 6 shows the results of calculation and simulation in EES software.

As we can see in figure 6 total efficiency of gas turbine cycle increase up to 38%. This simulation shows that decreasing air inlet temperature from ambient value to 15oC leads to decreasing compressor work therefor decreasing gas turbine cycle efficiency (about 600kW).

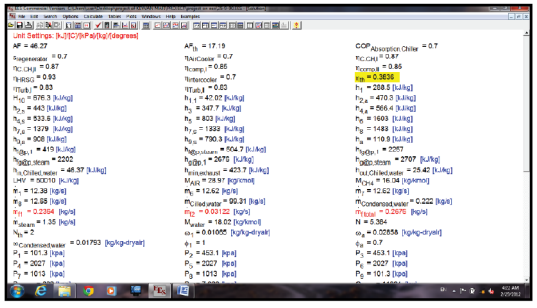

Figure 6: Gas Turbine Cycle Calculation's window in EES software

6. CONCLUSION

This paper deals with cooling the air intake of compressor to increases the gas turbine efficiency. By means of cooling the compressor air intake, an absorption chiller has used before compressor intake duct. High temperature exhausted gas from gas turbine recovered by a heat recovery exchanger and produce steam without consumption excess fuel. This steam feeds absorption chiller to make chilled water, chilled water cools the compressor intake air. This complex finally cools the compressor intake air due to improvement the efficiency of gas turbine.

Calculation and simulation shows that the variation of the air inlet temperature from 38oC to 15oC generates a reduction of 11.36 % in the compressor work. Also this leads to reduce fuel consumption in combustion chamber by 6.4%. Due to reduction the fuel consumption, the efficiency of cycle decrease (with considering constant power of turbine).

Results for power output, fuel consumption and gas turbine efficiency are also obtained for typically gas turbine without inlet cooling system and the gas turbine with compressor air intake cooling system

This model has simulated in EES software. Simulation of model helps us to change the variety of inlet temperature and other parameters. Thus, this method leads to increase the thermal efficiency by 1.5% for real site condition. Also this paper studies the effect of techniques of inlet air cooling and compares on performance, especially power, efficiency, fuel consumption, and condensable water. A comparison between air cooling techniques, namely, air-cooling system was performed on a gas turbine by using thermodynamic simulation EES software. The performance characteristics were calculated for a set of design and operational variables including ambient temperature, relative humidity, compressor pressure ratio, and turbine inlet temperature (simulation is available in EES software).

More details and results are available in EES software simulation.

7. ACKNOWLEDGEMENTS

The authors are also grateful to National Iranian Gas Company (NIGC) for providing all the necessary facilities for the research.

8. REFERENCES

Omar Othman Badran. 1999. Gas turbine performance improvement. International Journal of Applied Energy 64:263-273.

Ana Paula Santos. 2012. Analysis of Gas turbine performance with inlet air cooling techniques applied to Brazilian sites. International Journal of Applied Thermal Engineering 30: 263-273.

Al-Ibrahim, A. Varnham. 2010. A review of inlet air-cooling technologies for enhancing the performance of combustion turbines in Saudi Arabian. Applied Thermal Engineering 30:1879-1888.

Jaber, Q. M. et al. 2007, Assessment of power augmentation from gas turbine power plants using different inlet air cooling systems. Jordan Journal of Mechanical and Industrial Engineering 1:7-15.

Najjar, Y. S. H. 1996. Enhancement of performance of gas turbine engines by inlet air cooling and cogeneration systems. Applied Thermal Engineering 16:163-173.

H. Cohen. and G.F. Rogers. and H. Saravanamutto. 1987. Gas Turbine Theory. Henry Ling Ltd.

Ganapathy. 2003. Industrial boilers and heat recovery steam generators. Florida: CRC Press.

X. Q. Kong, R. Z. Wang, X. H. Huang, Energy optimization model for a CCHP system with available gas turbines, Applied Thermal Engineering 25 (2005), 377–391.